DR. VISHWANATH KARAD MIT WORLD PEACE UNIVERSITY

School of Engineering & Technology

Department of Electrical & Electronics Engineering

Academic Year: 2025–26

CIRCUIT CONCLAVE HACKATHON 2026

Electronics & Communication Engineering (AI ML), Semester II (Batch 2025-29)

Div: 23 | ORGANIZED BY: DoEEE IN ASSOCIATION with prismlabs Student Club

1. PROJECT OVERVIEW

Project Title:	Design and Implementation of a 4×4 Register File with Synchronous Read/Write and Asynchronous Clear
Division:	—
Team ID:	_____

2. TEAM REPRESENTATION

All details as per University Records.

Member Role	Full Student Name	Permanent Registration No. (PRN)
Member 1 (Lead)	Harshvardhan Rathod	_____
Member 2	Alok Deep Verma	_____
Member 3		

3. ACADEMIC ENDORSEMENT

Faculty Digital Electronics: Dr. Manisha Ingle & Dr. Sarika Patil

Faculty Basics of Electronics Engineering: _____

4. SUBMISSION CHECKLIST (FOR PRISM LABS CORE)

[ ] Official Undertaking Signed by All Members

[ ] Hard Copy of Technical Report Included

[ ] Digital Soft Copy Submitted via Official Link

[ ] Hardware Project Ready for Demonstration

5. OFFICIAL STAMP AREA

Submission Date & Department Stamp: _____

OFFICIAL CERTIFICATE OF PARTICIPATION

CIRCUIT CONCLAVE HACKATHON 2026

A Project-Based Learning Initiative | prismlabs & DoEEE

This is to certify that

STUDENT NAME: Harshvardhan Rathod

PRN: ———— | Division: —

has successfully participated in the **Circuit Conclave Hackathon 2026**, conducted at **MIT World Peace University, Pune**.

The participant has fulfilled the requirements of the **Round 1 Assessment** by submitting a functional hardware project and a comprehensive technical report under the guidance of their Faculty Mentor. This certification recognizes their commitment to practical engineering and collaborative problem-solving within the ECE framework.

Date of Issuance: 15th April 2026

OFFICIAL SIGNATORIES

Faculty Mentor, DoEEE	**prismlabs, Student Club**	**FY Coordinator, DoEEE**	**Parul Jadhav, PD, DoEEE**

INDEX — CIRCUIT CONCLAVE 2026

Sr. No.	Section Title	Page No.
01	Abstract	05
02	Introduction	05
03	Components & Technical Specifications	05
04	Circuit Diagram & Working Principle	05
05	Hardware Implementation & Assembly	06
06	Conclusion & Future Scope	06
07	Annexure I: Formal Undertaking by Participants	07
08	Section I: Team Acknowledgement & Signatures	08
09	Section II: Selection & Official Endorsement	08
10	Section III: Round 2 Performance Scorecard	10

1. ABSTRACT

Executive Summary

This project presents the design, PCB implementation, and functional verification of a 4×4 register file implemented from standard 74-series TTL integrated circuits. The system provides four 4-bit addressable storage registers supporting synchronous clock-triggered write, tri-state bus-buffered read, and asynchronous active-low clear. A NE555P astable circuit generates a 0.5 Hz clock for step-by-step observation. The KiCad PCB design (RAM-project-001) places 31 components using E-Switch SW_100SP1T1B4M2QE for data, address, and control inputs, and CQY99 LEDs for output display. The system was verified through complete functional testing across all register addresses and operating modes, with every test case confirmed correct.

Problem Statement

Engineering education in digital electronics often remains confined to theoretical instruction — students study register files, memory hierarchies, and processor architecture from textbooks without constructing these systems at the hardware level. Within the PBL framework, this project addresses that gap: by designing and building a 4×4 register file from discrete 74-series logic and progressing to a KiCad PCB, the team applied combinational and sequential logic theory, interpreted IC datasheets, managed bus contention, designed clock-gating circuits, and verified operation systematically.

Key Keywords

Register File Architecture | *Synchronous Write / Asynchronous Clear* | *Tri-State Bus Multiplexing* | *NE555P Astable Clock* | *TTL Address Decoding*

2. INTRODUCTION

Technical Objective

To design and implement a 4×4 addressable register file using 74-series TTL ICs, capable of synchronous clock-triggered write to any of four 4-bit registers selected by a 2-bit address, combinational tri-state read onto a shared LED bus, and asynchronous selective clear — all controlled by individual E-Switch inputs and a NE555P 0.5 Hz clock, implemented as a KiCad PCB.

PBL Alignment

This project directly operationalises five theoretical concepts from the FY B.Tech Digital Electronics curriculum:

- Boolean logic gates (NOR, AND, OR) are physically wired and tested — students observe how the NOR–AND chain generates a qualified clock.
- D flip-flop edge-triggering, hold state, and asynchronous reset are experienced through the 74LS175.
- Address decoding theory is realised in the 74LS139 decoder traced with a logic probe.
- The tri-state bus concept becomes intuitive when the 74LS244 output-enable is toggled and LEDs respond.
- The iterative design cycle — from 30 ICs to 9, then to a KiCad PCB — provides experience of specification, prototype, test, and refinement.

Background Research

The register file is the topmost tier of the memory hierarchy, forming the primary working storage for the ALU in every stored-program processor. Patterson and Hennessy (*Computer Organisation and Design*, 5th ed.) describe the register file as the fundamental abstraction separating the processor from main memory. Mano and Ciletti (*Digital Design*, 5th ed.) provide the theoretical basis for D flip-flop register arrays and decoder-based address selection. The 74-series TTL family from Texas Instruments has been the standard educational platform for discrete digital design since the 1970s.

3. COMPONENTS & TECHNICAL SPECIFICATIONS

Bill of Materials (BOM) — KiCad RAM-project-001.csv export. All ICs are standard 74-series TTL in DIP packages from Texas Instruments.

KiCad Ref	Part / Value	Specification	Qty	Purpose	Cost
A7408	SN74LS08N	Quad AND Gate, DIP-14	1	Write-enable clock gating	
B074244, B174244	SN74LS244N	Octal 3-State Buffer, DIP-20	2	Tri-state read bus	
CC1, CC2	Capacitor	Ceramic Disc, 0.1 µF 50V	2	VCC decoupling	
CNE555	NE555P	555 Timer, DIP-8	1	0.5 Hz astable clock	
CR1	Resistor	10 kΩ ¼W axial	1	555 R1 — charge path	
CR2	Resistor	68 kΩ ¼W axial	1	555 R2 — timing	
D74139	SN74LS139AN	Dual 2-to-4 Decoder, DIP-16	1	Address decoding	
D074175–D374175	SN74LS175N	Quad D Flip-Flop, DIP-16	4	4-bit register (per row)	
DIS0–DIS3	SW_100SP1T1B4M2QE	E-Switch SPST	4	Data input D0–D3	
AS0, AS1	SW_100SP1T1B4M2QE	E-Switch SPST	2	Address input A0–A1	
N7402	SN7402N	Quad NOR Gate, DIP-14	1	Row-select clock gating	
O7432	SN7432N	Quad OR Gate, DIP-14	1	Asynchronous clear logic	
OL0–OL3	CQY99	LED 5mm, LED_D5.0mm	4	Output bus display	
OR0–OR3	Resistor	220 Ω ¼W axial	4	LED current limiting	
SWC1	SW_100SP1T1B4M2QE	E-Switch momentary	1	Clear button (→ LOW)	
SWW1	SW_100SP1T1B4M2QE	E-Switch momentary	1	Write/RW button (→ HIGH)	

Total Component Count: 31 components — 11 ICs, 8 Switches, 4 LEDs, 6 Resistors, 2 Capacitors. Single +5V supply.

4. CIRCUIT DIAGRAM & WORKING PRINCIPLE

Schematic / PCB Representation

The PCB layout below was designed in KiCad (RAM-project-001) and shows all component placements across the 4-row memory storage, allocator (clock-gating) section, clock circuit, and bus interfaces.

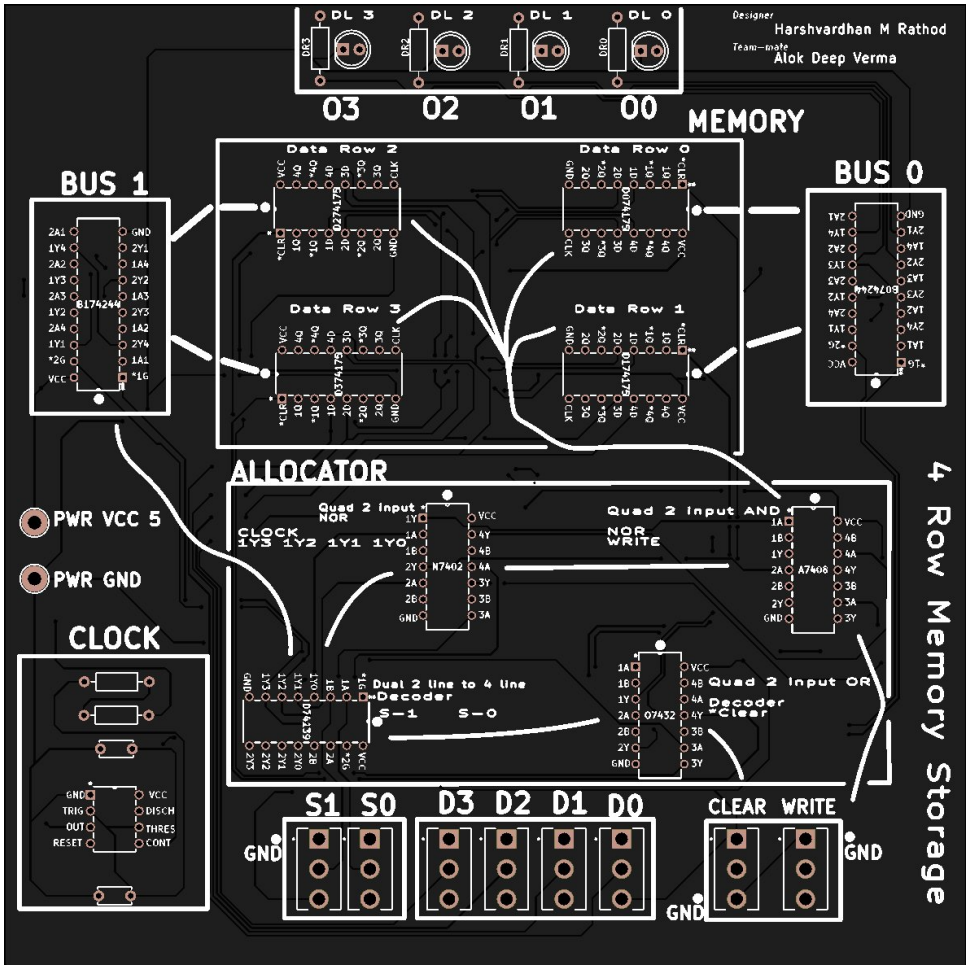

Figure 1: KiCad PCB Layout — 4 Row Memory Storage (RAM-project-001, Designer: Harshvardhan M Rathod, Teammate: Alok Deep Verma)

Working Principle

Input Stage

Data inputs D0–D3 (DIS0–DIS3) and address inputs A0–A1 (AS0, AS1) are set using individual SPST E-Switch push-buttons. The Write button (SWW1) drives RW=1 (write mode); releasing it returns to RW=0 (read mode). The Clear button (SWC1) is active-low, momentarily driving CLR\ to 0.

Processing Stage

The SN74LS139AN decoder, enabled by the active-low G\ pin (connected to RW), decodes the 2-bit address and drives exactly one of four active-low outputs. In write mode (RW=1, G\ high), all decoder outputs go high — no register is selected. In read mode (RW=0, G\ low), the selected output enables the corresponding 74LS244 buffer group. The NOR–AND clock chain (N7402 + A7408) qualifies the NE555P clock signal: only the selected register receives a clock pulse during write. The NE555P in astable mode generates a 0.5 Hz square wave ($f = 1.44 / [(10k\Omega + 136k\Omega) \times 20\mu F] \approx 0.5$ Hz).

Output Stage

Four CQY99 LEDs (OL0–OL3) with 220 Ω current-limiting resistors display the selected register's Q outputs. In write mode, data is latched on each rising clock edge. In read mode, the tri-state buffer drives the LED bus directly.

5. HARDWARE IMPLEMENTATION & ASSEMBLY

Breadboarding

Initial prototype built on breadboard with approximately 30 ICs — verified all operating modes (write, read, hold, clear). IC count subsequently optimised to 9 (then finalised at 11 in KiCad) by refining the clock-gating and buffer enable logic.

PCB Design (KiCad)

The finalised circuit was transferred to KiCad (RAM-project-001). All footprints use the project custom library (RAM-project-001-library-footprint). The board uses through-hole DIP packages for all ICs and E-Switch footprints for all switches. DRC was run and passed with zero errors. Gerber files (F.Cu, B.Cu, F/B Mask, F/B Paste, F/B Silkscreen, Edge_Cuts, PTH drill, NPTH drill) were generated and are ready for fabrication.

Testing Procedures

- Write Test: For each of the 4 register addresses (00, 01, 10, 11), set data on D0–D3, press Write (RW=1), observe correct LED latch after clock edge.
- Read Test: Release Write (RW=0), cycle through all 4 addresses, verify LED outputs match stored values.
- Clear Test: For each address, press Clear (SWC1), verify all 4 output LEDs immediately go LOW regardless of clock state.
- Hold Test: In read mode with no address change, confirm no spontaneous state change over multiple clock cycles.
- Bus Contention Check: Toggle between addresses rapidly in read mode — confirm no simultaneous multi-register drive (verified by stable LED output).

Result: 100% test-case pass rate across all operating modes and all 4 register addresses.

6. CONCLUSION & FUTURE SCOPE

Success Metric

The 4×4 register file was successfully designed and implemented using standard 74-series TTL ICs. All objectives were met: synchronous write on the rising NE555P clock edge, combinational tri-state read with no bus contention, asynchronous clear independent of clock state, and a DRC-clean KiCad PCB (31 components) ready for fabrication.

Learning Outcomes

- Mastery of D flip-flop (74LS175) edge-triggering, hold state, and asynchronous reset through hands-on hardware testing.
- Practical understanding of address decoding (74LS139) and tri-state bus management (74LS244).
- Experience with the iterative design cycle: simulation → breadboard prototype → PCB layout.
- KiCad PCB design skills: schematic capture, footprint assignment, layout routing, DRC, and Gerber export.
- Systematic functional verification methodology across all system operating modes.

Future Scope

- Expand to an 8×8 register file with 3-bit addressing for larger data storage capacity.
- Add a 7-segment display decoder for human-readable numeric output display.
- Implement dual-port access enabling simultaneous read from two separate addresses.
- Replace 74-series ICs with FPGA implementation in VHDL/Verilog for direct speed comparison.
- Integrate with a simple ALU to form a minimal CPU datapath demonstration system.

ANNEXURE I: FORMAL UNDERTAKING BY PARTICIPANTS

(TO BE SUBMITTED WITHIN THE OFFICIAL PROJECT FOLDER)

Project Title: Design and Implementation of a 4×4 Register File with Synchronous Read/Write and Asynchronous Clear

Division: — **Team ID: _____**

We, the undersigned students of **MIT World Peace University**, hereby solemnly declare and affirm that the project work presented in this folder is an original outcome of our collective efforts as a team. In pursuit of the **Circuit Conclave Hackathon 2026** organized by **prismlabs**, we confirm the following:

1. Statement of Originality & Academic Integrity

- We certify that the hardware design, component assembly, and subsequent documentation are original works performed solely by the registered team members.
- We acknowledge that any form of plagiarism, including the use of pre-built commercial circuits or uncredited online schematics, shall result in immediate disqualification and a report to the Departmental Head.

2. Adherence to Technical & Safety Guidelines

- We have strictly followed the technical guidelines provided by our Faculty Mentor during the classroom induction and PBL briefing.
- We agree to comply with all laboratory safety protocols, including the responsible use of soldering equipment, ICs, and shared lab multimeters.

3. Submission Accountability

- We confirm that both the Hard Copy (Folder) and Soft Copy (Digital Report) have been submitted before the division-specific deadline.
- We understand that the Official Front Page, Assessment Scorecard, and this Undertaking are mandatory components of the folder; absence of any will render the submission invalid.

4. Finality of Assessment

- We respect the selection process whereby only the Top 5 Teams per division will be shortlisted for Round 2 based on the official scorecard metrics.
- We agree that the decision of the Judges and Faculty Mentors is final and binding in all matters related to the Circuit Conclave Hackathon 2026.

SECTION I: TEAM ACKNOWLEDGEMENT & SIGNATURES

Member Role	Full Name	PRN	Signature
Member 1	Harshvardhan Rathod	_____	
Member 2	Alok Deep Verma	_____	
Member 3			

Date of Submission: _____
Verified by (Faculty Mentor): _____
External Jury Name: _____

SECTION II: SELECTION & OFFICIAL ENDORSEMENT

(FOR OFFICIAL USE ONLY)

TEAM ID: _____ DIVISION: _____

1. ROUND 1 EVALUATION SUMMARY

WORKING MODEL: _____ / 20

UNDERSTANDING: _____ / 20

PRESENTATION & DEMO: _____ / 10

FINAL SCORE IN ROUND 1: _____ / 50

2. ROUND 2 SELECTION STATUS

[ ] SHORTLISTED (TOP 5 PER DIVISION)

[ ] WAITLISTED (2 TEAMS MAX)

[ ] NOT SELECTED

3. AUTHORIZED SIGNATORIES

_____

Faculty Mentor Signature

Name:

_____

Team prismlabs Signature

Name:

DISCLAIMER & CONFIDENTIALITY

Project Integrity: This document is a formal record of the Circuit Conclave Hackathon 2026 and the Project Based Learning (PBL) initiative at MIT-WPU.

Copyright: The circuit designs and technical reports contained herein remain the intellectual property of the registered team members and prismlabs.

Final Authority: The organizing committee and faculty mentors reserve the right to disqualify any team found in violation of conduct or safety protocols post-submission.